WATER IONIZER

BIONTECH

OPERATION MANUAL

Model : BTM-505N

Dedicated to runing water lines

* Note : There is a protection film on the operation panel of this product.
* Read this manual carefully for proper use of the product. Keep the manual in a safe place and refer to the manual whenever necessary.
* Our company will not be held responsible for any malfunction or accident resulting from incorrect installation or improper handling.

GMP
Korea Food & Drug Administration

Bion-tech

Table of contents

① Use this manual to install the product correctly.
Make sure that all plumbing and electric work comply with the regulations of your residence.

② Discontinue and seek for professional help if you inspect a water leakage.

③ The performance of the unit will depend on the quality of water source.
Please check water condition before the installation of this product.

④ Biontech Co., Ltd. will not be held resposible.

⑤ Please keep this manual and other documents for future reference.

Table of contents

1. Name and description of each part of the product ····· 4
2. Safety preparations ····· 6
3. How to install ····· 8
   · Installation precautions ····· 8
   · How to install ····· 9
4. Before using the product ····· 13
   · Precautions for using the product ····· 13
   · Using the product appropriately for each purpose ····· 14
   · How to store and manage the product after it is used. Precautions for using it ····· 16
5. How to generate ionized water ····· 17
   · Selecting the alkaline ionized water ····· 17
   · Selecting the acidic ionized water ····· 17
   · Selecting the purified water ····· 18
   · How to measure the pH value ····· 19
6. When and How to replace the filter ····· 19
   · When to replace the filter ····· 18
   · How to replace the filter ····· 20
   · Cleaning Filter ····· 21
   · How to use cleaning filter ····· 22
7. How to use ionized water ····· 23
8. Before you think the system is malfunctioning ····· 25
   · Questions and Answers (Q&A) ····· 25
   · About after service (A/S) ····· 27
9. Product Specifications ····· 31

Components

- The following components need to be checked before installation.
- The illustration shows basic components, their shapes may appear different from the actual components.

Water Supply Control Valve Set				Adaptor(Optional)
				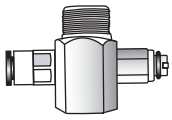
x1	x1	x2	x1	x1

Flexible Alkaline Faucet
x1

Wall-hanging Nails and Fuse	Hose Band	Safety Pins
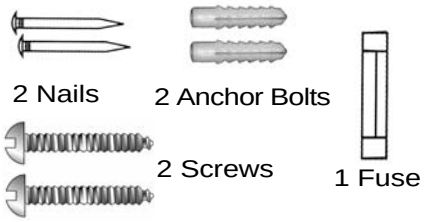		
2 Nails 2 Anchor Bolts 2 Screws 1 Fuse	x1	x2

Hose	pH Test Solution	Valve Cover
	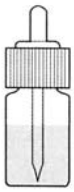	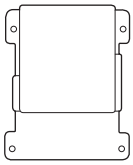
x1 x1 Ø 7x9 PVC hoses: 70cm 1/4" standard hose: 2m (PE reinforced hose)	x1	x1

For Water Outlet (Optional)			pH Comparison Sheet
	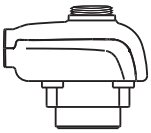		
	x1	Water outlet x1	

Installation Drawing	
For Mounted Wall	For Water Outlet
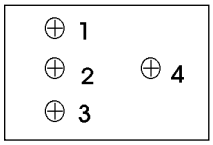	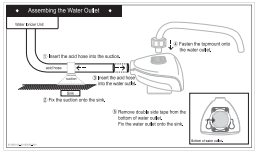

- **If malfunctioning is generated because genuine components designated by the company are not used, the warranty service will not be provided.**

1 Name and description of each part of the product

Front Side

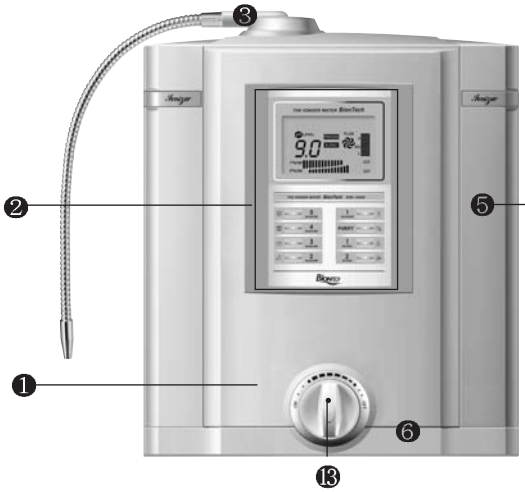

Rear Side

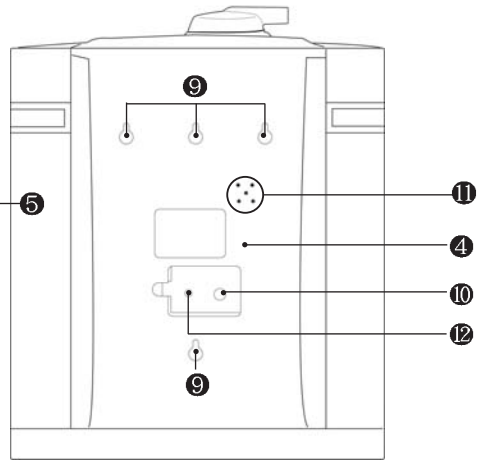

Bottom Side

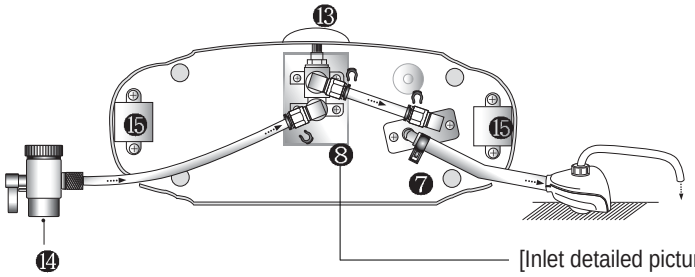

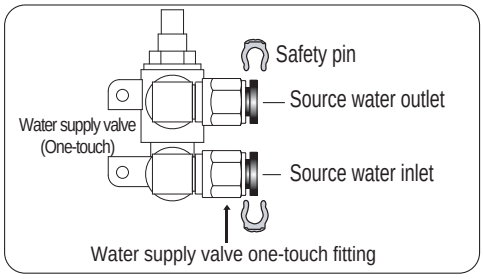

[Inlet detailed picture]

Number	Name	Function
1	Front Plate	Where the circuit systems and devices are fixed
2	Operating Panel	Operation and display of functions
3	Flexible Alkaline Faucet	Outlet pipe from which the alkaline ionized water flows out (Acidic ionized water flows out when the acidity is chosen)
4	Back Plate	Protective cover for the internal circuits and components
5	Filter Cover	Protective cover for the filter
6	Bottom Plate	Where the transformer, electrical cords and devices are fixed
7	Acidic Water Outlet	Outlet pipe from which the acidic ion0ized water flows out (Alkaline ionized water flows out when the acidity is chosen)
8	Inlet	Supplys the source water to the product
9	Wall-hanging Hole	Hangs the product on the wall using nails
10	Fuse Holder	Safety system (Rated fuse : According to the area's electric power condition)
11	Speaker	For voice guidance and buzzer sounds
12	Volume Adjustment	Adjusts the volume of the voice guidance
13	Water Supply Adjustment Valve	Controls the operation of the product and the volume of water
14	Water Supply Control Valve	Ionizer operation and water flow adjustment (on/off)
15	Fliter cover locking device	Place where the fiter cover is safely locked

Operating Panel

❸ Indication light for purified water
To be turned on when purified water is chosen

❶ Indication light for alkaline ionized water.
To be turned on when alkaline water is chosen
❷ Indication light for acidic ionized water.
To be turned on when the acidic water is chosen

▶ **Indicating the filter usage status.**
The usage status of the filter

▶ Indicating the errors for
- Overheated electrolytic bath
- Failed self-cleaning
- Excessive water cleaning flow Colume
- Not approved filter

▶ [Alkaline ionized water] selection button.
Button for selecting the alkaline ionized water

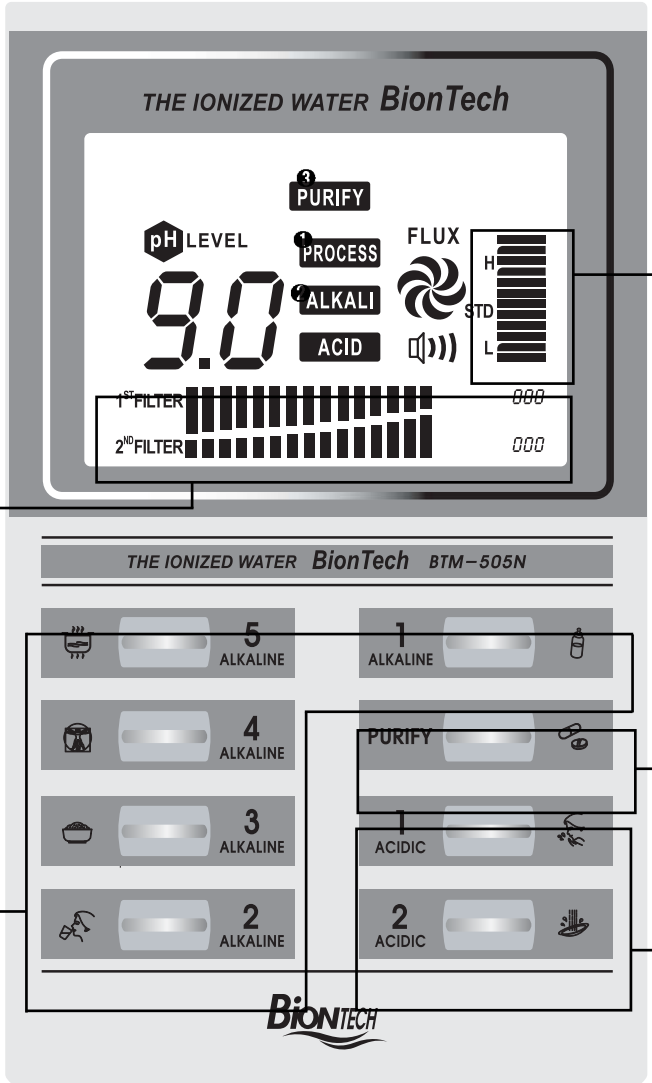

▶ Indication light for flow volume.
❶ "High" indication light.
Indicating when the flow volume is higher than the appropriate level
❷ "Standard" indication light
Indicating when the flow volume is normal, and the indication level is varies depending on the flow volume
❸ "Low" indication light.
Indicating when the flow volume is lower than the appropriate level

▶ [Purified water] selection button.
Button for selecting the water purification function only

▶ [Acidic ionized water] selection button.
Button for selecting the acidic ionized water

2 Safety Preparations

Description of the symbol marks

The following describes the precautionary items that can prevent the potential damage to the body or the property. The cases of misapplication and resultant risks are divided into Warning and Caution items. You are required to read thoroughly and comply with the descriptions considering they are related to your safety.

- **Caution** - You should read the documents marked with the following symbols.

Warning	● Indicates that deadly effect can be caused to the body if you use the product wrongly because of your disregard for the items.
Caution	● Indicates that injury to the body or damage to the property can be caused. if you use the product wrongly because of your disregard for the items.

- Prohibition

Marks	Classification	Description
	General items to be prohibited	● Indicates the general items to be prohibited.
	Fire sources to be prohibited	● Indicates the possibility of the product or components catching fires due to external sources of fire.
	Showering to be prohibited	● Indicates the possibility of the product causing electric shocks due to electric leakage if it is submerged.
	Disassembly to be prohibited	● Indicates the possibility of the product causing electric shocks if it is disassembled.

- Instruction

Marks	Classification	Description
	General	● Items related to the general behaviors of users.
	Disconnecting the plug from the wall socket.	● The plug needs to be disconnected from the wall socket if there is a possibility of malfunctioning or lightening.

◆WEEE Directive

This marking shown on the product or its literature, indicates that it should not be disposed with other household wastes at the end of its working life. To prevent possible harm to the environment or human health from uncontrolled waste disposal, please separate this from other types of wastes and recycle it responsibly to promote the sustainable reuse of material resources.

Household users should contact either the retailer where they purchased this product, or their local government office, for details of where and how they can take this item for environmentally safe recycling.

Business users should contact their supplier and check the terms and conditions of the purchase contract. This product should not be mixed with other commercial wastes for disposal.

- **Warning** - Should be followed for your safety.

	● This application can be used by children aged from 8 years and above and persons with reduced physical, sensory or mental capabilities or lack of experience and knowledge if they have been given supervision or instruction concerning use of the appliance in a safe way and understand the hazards involved. Children shall not play with the appliance. Cleaning and user maintenance shall not be made by children without supervision. If the supply cord is damaged, it must be replaced by the manufacturer, its service agent or similarly qualified persons in order to avoid a hazard.
	● Do not apply any different power voltage other than the indicated power voltage. If not followed, fires or electric shocks can be caused. ● The fuse capacity of the product is 3A. Do not use any other fuse with different capacity. ● Stop using the product immediately when any malfunctioning is found.
	● Do not handle the electric plug or operate the power button with wet hands. If not followed, electrical shocks can be caused.
	● Should hold the electric plug when inserting it into the wall socket or removing it from the socket. ● Damage to the electric cord, fires or electrical shocks can be caused when if the cord is pulled. ● Clean the wall socket after removing the electric plug. - When there are lots of dusts settled on it, fire can be caused.
	● Do not connect multiple cords to one single wall socket. When a wall socket is shared, abnormal heat can be generated, possibly causing a fire.
	● Electrical shocks, short-circuiting, ignition of fires can be caused if a damaged electric cord or plug is used ● Do not damage, process or forcibly wind or pull the electric cord. - The cord can be damaged, possible leading to fires or electric shocks. ● Do not fix the electric cord by using a stapler. - The cord can be damaged, possible leading to fires or electric shocks.
	● Electric shocks can be caused if the product is dropped into water by mistake. The following measures need to be taken. ① Remove the electric plug from the wall socket. ② Recover the product from the water. ③ Contact the sales shop or the main office for advice.
	● Should not arbitrarily modify, disassemble or repair the product. If not followed, fires and electric shocks can be caused. The company will not be held responsible for any accidents generated from such activities.

3 How to install

Caution - Malfunction or accidents can be occured.

- Do not place any other objects on the product.
- Do not install the product in the areas described as the following.

■ Installation Precautions

Requiring you to check the rated voltage before connecting the electric cord.

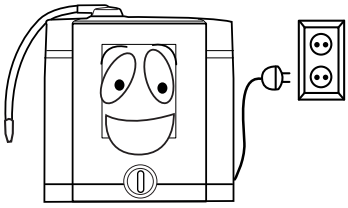

Do not install the product in a place where the sunlight comes in directly or the temperature goes below zero.

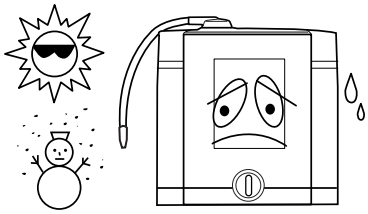

■ If not followed, the case can be transformed or broken due to freezing.

Precautions for connecting the acidic water hose.

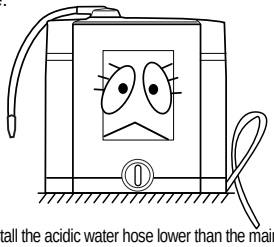

■ Install the acidic water hose lower than the main case.
■ If the hose is longer than necessary or higher than the main case, the ion generation can be affected, possibly leading to a change in the taste of water.

Should connect the product to the cool water pipe (If connected to the warm water pipe, the purification filter and the electrolytic bath can be damaged)

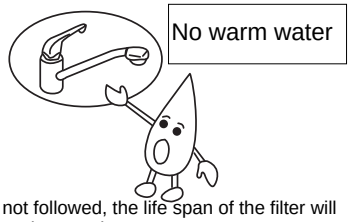

■ If not followed, the life span of the filter will be shortened.

Avoid any place where heat of fire can be directly contacted

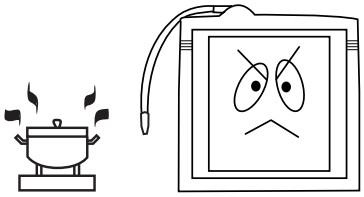

■ If not followed, the case can be transformed, possibly leading to water leakage

Do not modify the product arbitrarily.

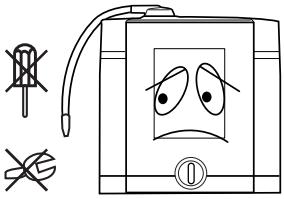

■ If not followed, damage to the product or risk to your safety can be caused.

Should hold the bottom plate of the main case.

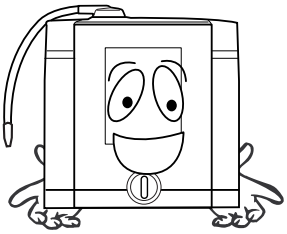

■ It will be safe to move the product by holding the product at the bottom plate.

Do not use the product in a place full of moisture or dusts

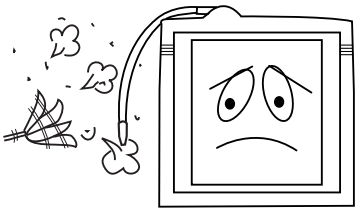

■ If not followed, damage to the product or risk to your safety can be caused.

Caution

- If the product is dropped, electric shocks can be caused due to the internal malfunction following the impact from the dropping. The product needs to be taken to the sales shop or the main office in order for you to request an inspection.
- The purification filter can be broken due to freezing if the product is used in a place where it is freezing cold, requiring the product, if not used, to be stored in a place where the breaking due to freezing can be prevented, but after the purification filter is removed first.

Caution

- Check whether the components to be installed at the water tap are appropriate.
- Should use the standard hose (1/4"), supplied by the company for the connection. Use the one- touch adapter to fasten the hose before fixing the safety pin as illustrated in Page 3.
  - If the standard hose is not used, damage due to water pressure can be caused, possibly leading to water leakage
- Do not connect the product to a warm water pipe.
  - Degradation of purification capacity and malfunctioning can be caused.

■ How to install

1. Wall mounted water tap

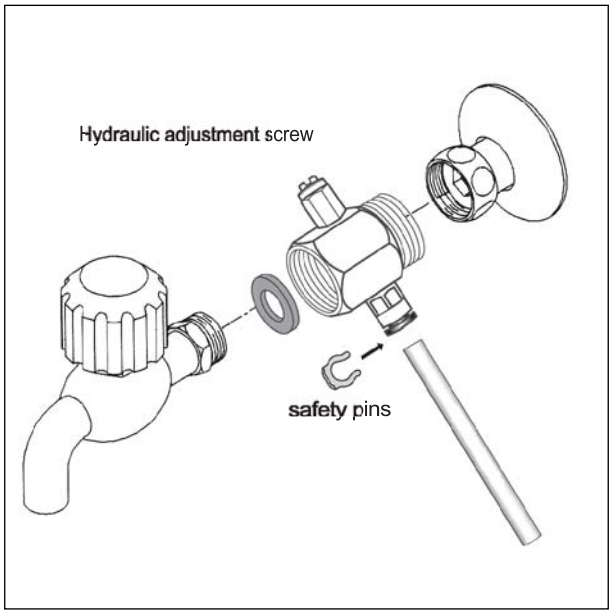

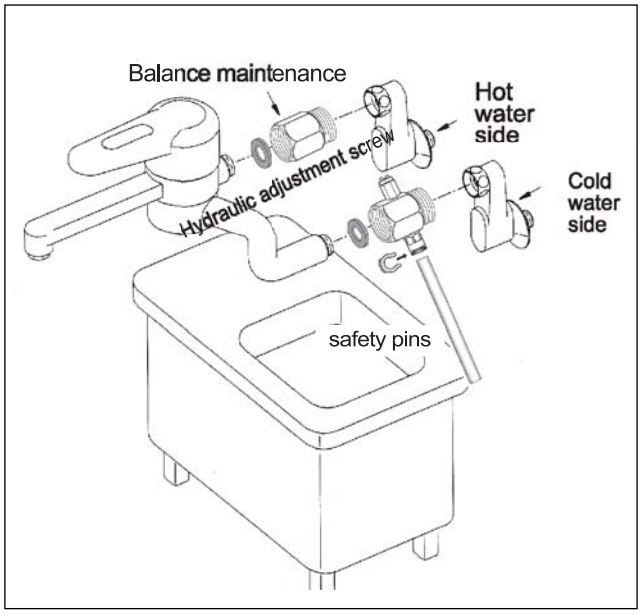

1. Disconnect the water tap from the water pipe.

2. Rotating the adapter into the water pipe. (Single-water tap)

3. Assemble the water tap back into the adapter. (Single-water tap)

4. Install the standard compliant adapter Included (Select between large and medium, small, 3/8") between the water pipe and the water branch pipe. Then install the adapter which needs to be connected to the water ionizer to the cold water pipe, while connecting the balancing adapter to the warm water pipe. (Water taps for cold and warm water)

5. Place the rubber gaskets between the water pipes, water tap, and adapter, and should apply the Teflon tape to the connection parts to assemble them.

6. Insert the inlet hose into the one-touch fitting installed to the adapter and then fasten the safety pin.

7. Adjust the water pressure control screw to a appropriate level.
   (Alkaline water flow standard: 1.5 ± 0.5 ℓ/min)

※ Should use the standard inlet hose (1/4") and fix the valve cover in the direction of the hose to prevent the hose from being bent or the fastening nut from being loosened.

2. Deck type sink mounted water tap

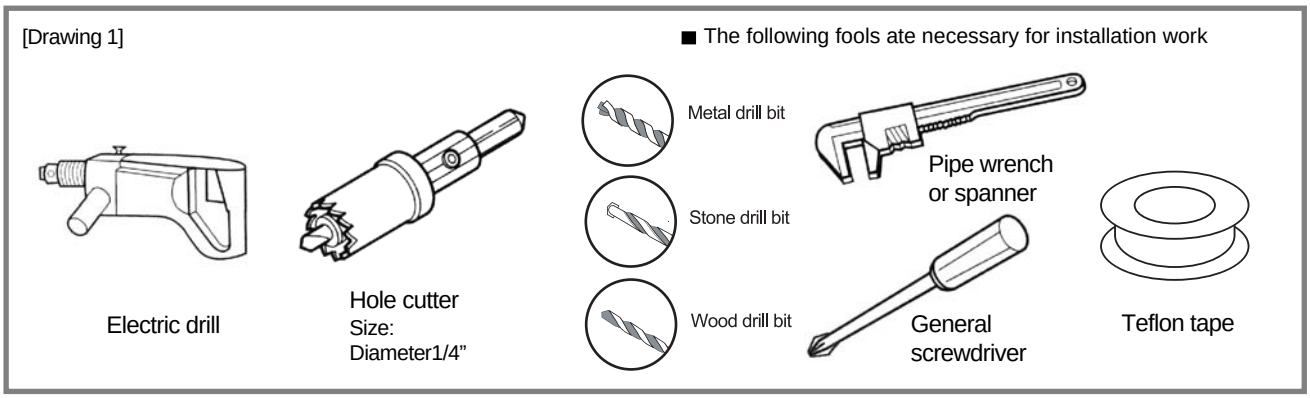

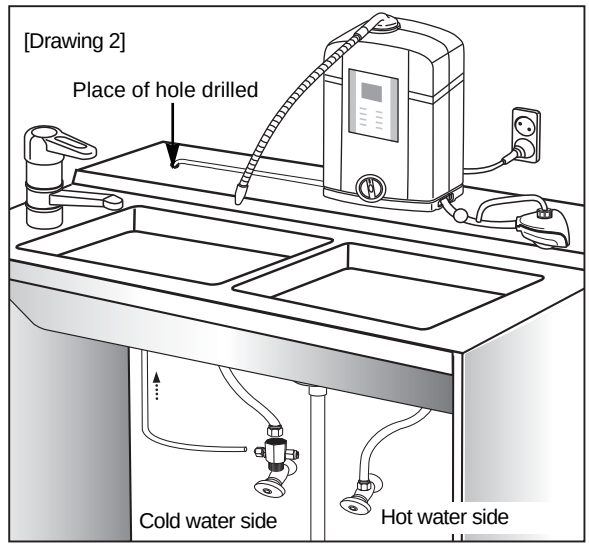

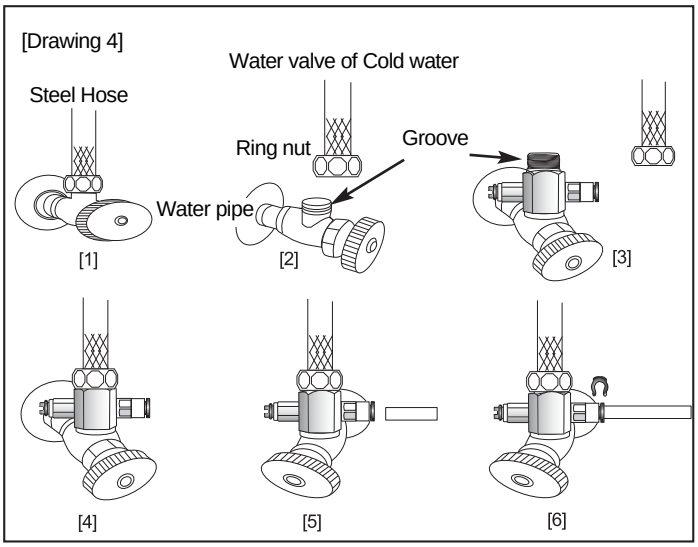

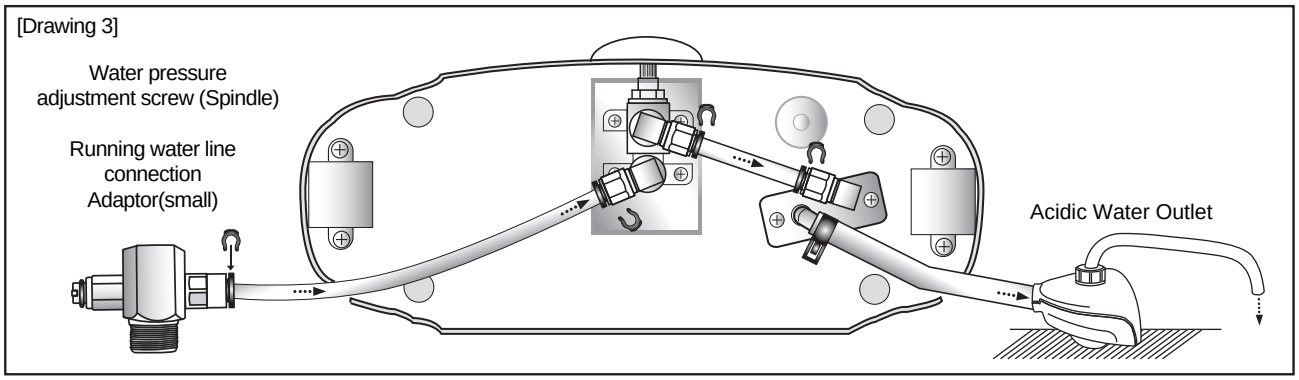

1. Prepare the tools for installation as drawing : Electric drill, Hole cutter, Pipe wrench or spanner, General screwdriver, Teflon tape 1pc (Drawing 1.)

2. Turn off the water valves before installation under the sinkdeck.

3. Disconnet the water tap from the cold water pipe.

4. Drill a hole for the 1/4" hose appropriate place somewhere in sinkdeck and make the connection to the inlet of the product

5. Find the cold water pipe inside the sink deck and connect the adapter to the cold water pipe (Drawing 2.)

6. Connect the standard connection hose (1/4") to the adapter installed with one touch fitting of union. (Drawing 3~4)
Insert the inlet hose deepest into the one touch fitting and insert the safety pin as in drawing.
(Pls check if the hose has been securely fitted to the end of one thouch fitting. if not, it causes water leakage for water pressure)

7. After the connection, adjust the water pressure control screw to an appropriate level
(Alkaline water flow standard 1.5±0.5 ℓ/min)

8. Check any possible water leakage at the connection parts after the installation

■Should use the standard inlet hose (1/4") and fix the valve cover in the direction of the hose to prevent the hose from being bent or fastening nut from being loosened.

3. Water Supply Control Valve

How to assemble the valve to the faucet

Assembly method of valve for Deck-sink water tap

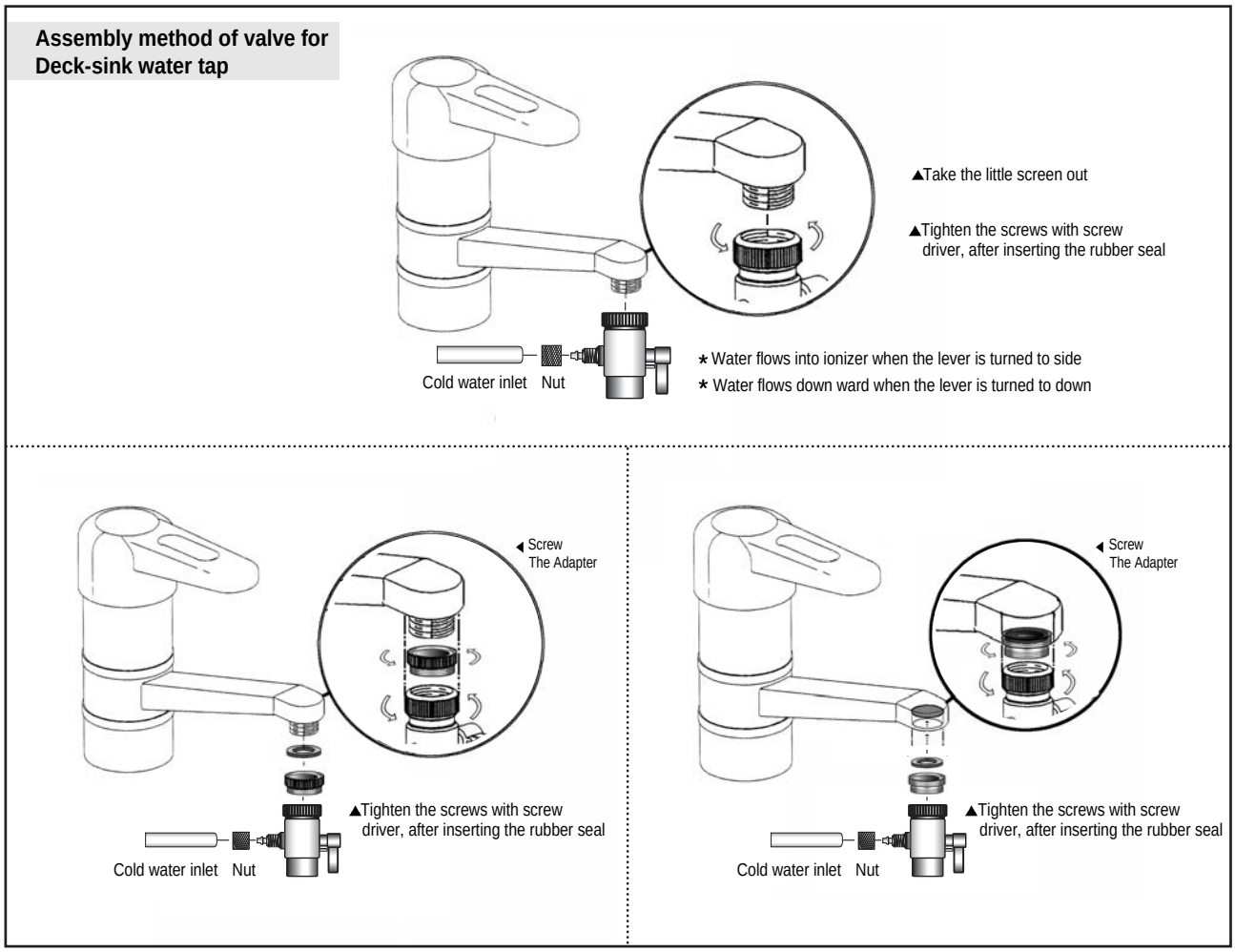

4.Hose Connected Method

After finishing of connection, assemble the valve cover with screws completely

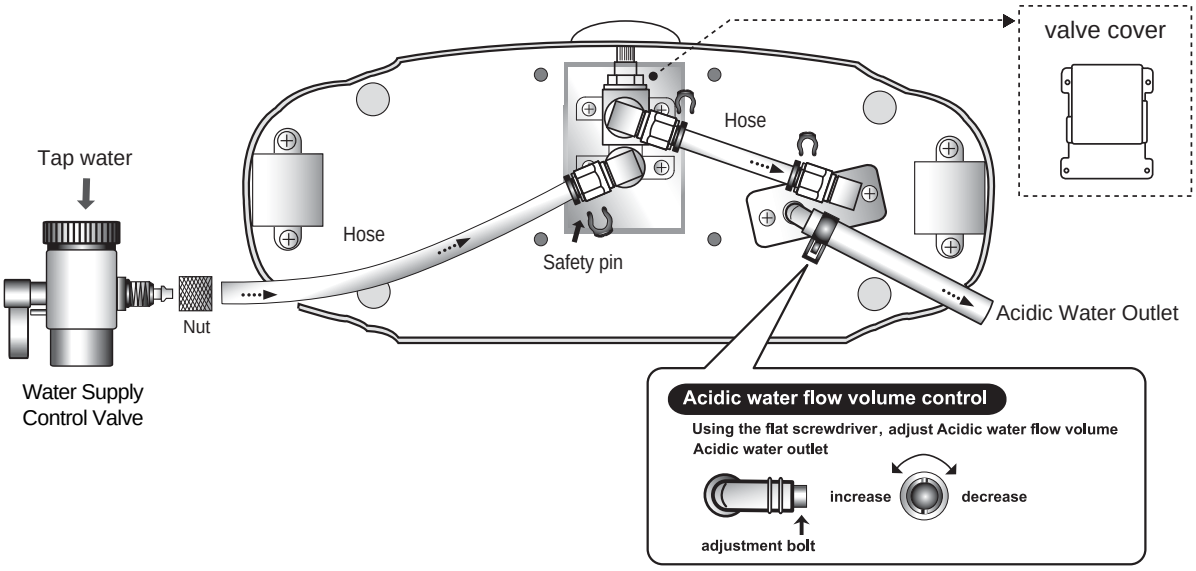

Caution

- Do not install the product in the following areas:
  - If not followed, malfunctioning can be caused.
  - If vibration and impact can be felt
  - If direct sunlight comes in
  - If there are lots of moisture or dusts
  - If heat of fire can be felt
  - If horizontality can not be acquired
  - If bathroom is installed or winds and rains can affect
  - If there is a risk of breaking due to freezing
  - If damage can be caused to the product

- You are required to contact the sales shop or the specialized installer for queries when you attach the product to the wall.
- Improper mounting may result in the product falling of, accident or mal-function.

5. Steps for assembling the component before installing them

- First of all, assembling the flexible pipe to the half-moon shaped alkaline water outlet at the upper part by turning it clockwise.
  1. Measure the distance between the place for installation and the adapter installed to the water tap and then cut the hose with an extra length.
  2. Cut the PVC hose for the acidic water into the length of 50~70cm and place it lower than the product.

Should use the standard inlet hose (1/4") and fix the valve cover in the direction of the hose to prevent the hose from being bent or the fastening nut from being loosened. The safety pin needs to be inserted before using the water.

- The product can be used conveniently by placing it on any place by applying the wall mounting or stand type (Turn table) depending on the place of installation.
- After installation, connect the product to the AC120V power line.
- When the water flows through the product, the power will be turned on automatically. Then, select Purified Water menu to enable the water branch pipe to open and close repeatedly to allow the water to flow for 2~3 minutes freely. Then push the pH button to set the desired concentration and compare it with pH comparison sheet. The black water that will come out is the filter dusts flowing with water, not dangerous to the body. (Refer to How to measure the pH value in Page 18)

6. How to install in different places

A) When installing the product onto the wall

- Apply water to the installation drawing and place it onto the wall while keeping the horizontality
- Of those nailing positions at the width (1~3) or the height (2 ~4), choose the convenient ones for driving 2 nails
- Place the hanging holes of the product onto the nails

⊕: Positions of nails

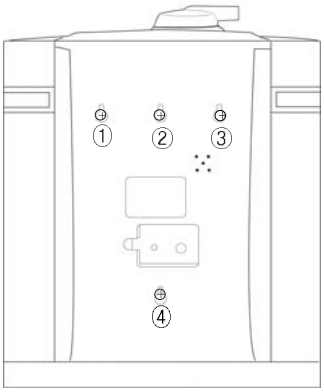

B) When placing the product on the sink deck and its supports.

- Place the main case of the product on an appropriate position.
  - When the above steps are finished, use the hose to connect the valve cock of the adapter to the inlet pipe at the bottom of the main case of the water ionizer.

7. In case of power failures or suspension of water supply

■ In case of power failures.

· Turn off the water branch pipe in case of power failures.
(When letting water flow through, purified water will come out)

· Use the product normally when the power is recovered.

■ In case of suspension of water supply.

· Do not use the product.

· Stop the water from flowing through when the water supply is suspended in the middle of using the product.

When the water supplied is resumed, let the water flow sufficiently for direct water supply or showering in order to help the inside air and other materials come out. Without going through such steps, the water still can be used normally, but with the risk of drastic decrease of the life span of the filter when allowing air or other materials flow through the main body.

4 Before using the product

Precautions for use

1. the appliance is not to be used by children or persons with reduced physical, sensory or mental capabilities, or lack of experience and knowledge, unless they have been given supervision or instruction
2. children being supervised not to play with the appliance

Important safeguards

When using electrical products, especially when children are present, basic safety precautions should always be followed, including the following:
READ ALL INSTRUCTIONS BEFORE USING

Danger - To reduce the risk of electrocutions.

1. Always unplug this product immediately after using.
2. Do not use while bathing.
3. Do not place or store product where it can fall or be pulled into a tub or sink.
4. Do not place in or drop into water or other liquid.
5. Do not reach for a product that has fallen into water. Unplug immediately.

Warning - To reduce the risk of burns, electrocution, fire, or injury to persons.

1. A product should never be left unattended when plugged in.
2. Close supervision is necessary when this product is used by, on, or near children or invalids.
3. Use this product only for its intended use as described in this manual. Do not use attachments not recommended by the manufacturer.
4. Never operate this product if it has a damaged cord or plug, if it is not working properly, if it has been dropped or damaged, or dropped into water.
   Return the product to a service center for examination and repair.
5. Keep the cord away from heated surfaces.
6. Never block the air openings of the product or place it on a soft surface, such as a bed or couch, where the air openings may be blocked. Keep the air openings free of lint, hair, and the like.
7. Never use while sleeping or drowsy.
8. Never drop or insert any object into any opening or hose.
9. Do not use outdoors or operate where aerosol (spray) products are being used or where oxygen is being administered.

Caution

- Use tap water only.
  - This machine is manufactured for drinking water based on standard tap water.
- Do not use the following water, as problems may arise:
  - Turbid and contaminated water
  - Water with high hardness
  - Very salty water
  - Water with high concentration of red rust

Precautions for using the product

· Do not hold up the main case while holding the outlet flexible pipe. (Cause for breakage)

· Do not operate the strong alkaline ionized water (Stage 5) continuously for a long period of time. If you use the product in such manner, the system protective circuit (Temperature sensor) may be started, depending on the quality of water, and the electrolysis can be suspended.

◎ When using the product in a place where the water hardness is high.

· Before using the water initially daily, push the acidic water button to allow the acidic water to flow through for about 1 minute.

· In case of tap water, in places where the water is used a lot. You need to push the acidic water button one time daily to allow the water to flow through for the manual rinsing. (By selecting the acidic water button).

※ In places where the water hardness is high or compounds of calcium are abundant, there can be white sedimentation inside the case, requiring additional purifying system to be used depending the level of the sedimentation.

Caution

- Do not fill the calcium container with no other substances than the designated.
  - Glycerin acid calcium (Electrolysis facilitating calcium) or calcium sulfite (Removal of chloride).
- Should turn off the water pipe when filling the calcium.
  - If not followed, water leakage can be caused.
- Check where the calcium container cap is surely fastened.
  - If not fastened surely, water leakage can be caused when the water flows through.

Use the product appropriately for each purpose

pH level selection	Indicated	pH value instructed	
5 ALKALINE	· When infusing vegetables to remove their bitter taste · When washing soak vegetables to eliminating Agricultral chemical. · Use it for drinking after consulting the doctor	10.5 ±0.5	High
4 ALKALINE	· Recommendable for medical and culinary usage	9.5 ±1.0	
3 ALKALINE	· Recommendable for drinking and cooking	9.0±1.0	Alkaline
2 ALKALINE	· Recommendable for daily drinking	9.5±1.0	
1 ALKALINE	· Recommendable for initial drinking or dissolving powdered milk	7.5±1.0	Low
PURIFY	· Purify		
1 ACIDIC	· Recommended for skin care an astringent	5.5±1.0	Low
2 ACIDIC	· For washing dishes · Strong acidic sanitary or rinsing water can come out when the water volume is adjusted · Rising with Acid water to elimininating Viruses Bacilli and wash with Alkali water.	3.5 +1.0	Acidity High

※ The pH value instructed is acquired by taking into consideration the source water based or Seoul, Korea concentration of pH 7.0 ± 0.5 based on the Alkaline water flow standard of 1.5 ℓ/m (±0.5 ℓ).

※ The pH values of the alkaline and acidic ionized water may not fall into the range of the pH value instructed of the table above depending on the water quality and water flow volume.

Caution - Usage of the product

- Do not use flammable materials like benzene or sprays for the product.
  - Malfunctioning can be caused.
- Sufficient attention needs to be paid when a child of young age uses the product.
- Use the water initially daily after letting the water flow through for 10 ~ 15 seconds by opening the water tap completely.
- Use the water after letting the water flow through for more than 30 seconds when using the product after not using it for a few days.
- Contact the sales shop or the main office for advice when the generated water smells.

- Do not drop the product or apply strong impact to it.
  - Dropping or impact can cause malfunctioning.
- Do not block the water outlet. If blocked, water leakage or malfunctioning can be caused.
- Should place the outlet hose (Acidic water outlet) below the main case.
- Do not use the water which is above 30°C If not followed, malfunctioning can be caused.

How to store and manage the product after it is used.
Precautions for using it

1. How to store and manage the product after using it.

① Turn off the power before moving the product
② Do not let water come inside the main body.
③ Do not block the outlet nozzle or the drainage hose arbitrarily. Do not bend or twist the hose arbitrarily.
④ Turn off the source water supply valve when the system will not be used for a long period of time.
⑤ Disconnect the electric cord from the wall socket when the system will not be used for a long period of time.
⑥ Clean the surface of the main body with soft cloth soaked with soap water.

2. Precautions for using it.

(1) Precautions to be taken when using the Alkal Life.

● Pay attention to the following items when drinking the alkaline ionized water generated through the electrolysis.

① Consult a doctor before drinking the strong alkaline water of stage 5.
② Those people with achlorhydria need to take the advice from a doctor for drinking the treated water
③ Do not use any type of water that can not meet the water quality requirements for the drinking water
④ The product is designed exclusively for the water of normal temperature, so warm water should not be used.
⑤ Do not drink the alkaline ionized water together with medicine.
⑥ Those people who just started using the water need to begin with small amount of nearly pH neutral water. They need to consult a doctor for drinking the strong alkaline water.
⑦ Stop drinking the water and consult a doctor if you feel abnormality after drinking the water, or if there is no alleviation of symptoms felt in the stomach even after continuously drinking the water.
⑧ Those people who currently go through medical treatment by a doctor, especially because of problems with the kidney or the body, need to consult a doctor before drinking the water.
⑨ Those people with problems with the kidney, such as renal failure, calcium excretion failure, should not drink the water.
⑩ Those people who drink the alkaline ionized water need to check, once a month since after the initial drinking, whether the pH value is still within the range for drinking, through utilizing a glass electrode type pH device or colorimetry before they continue to drink the water.
⑪ Drink after let the initial alkaline water flow through.
⑫ Avoid any metal container if possible and drink the water within a day while keeping it cold.

(2) Pay attention to the following items regarding the use environment and conditions.

① Should keep the water flow volume at an appropriate level in order to prevent the alkaline ionized water from being generated with difference in the pH value compared with the set pH value due to the difference in the water flow volume.
② Do not use the product in a place, like a bathroom, where temperature or moisture is high.
③ Use the product in a place where there is no slope.

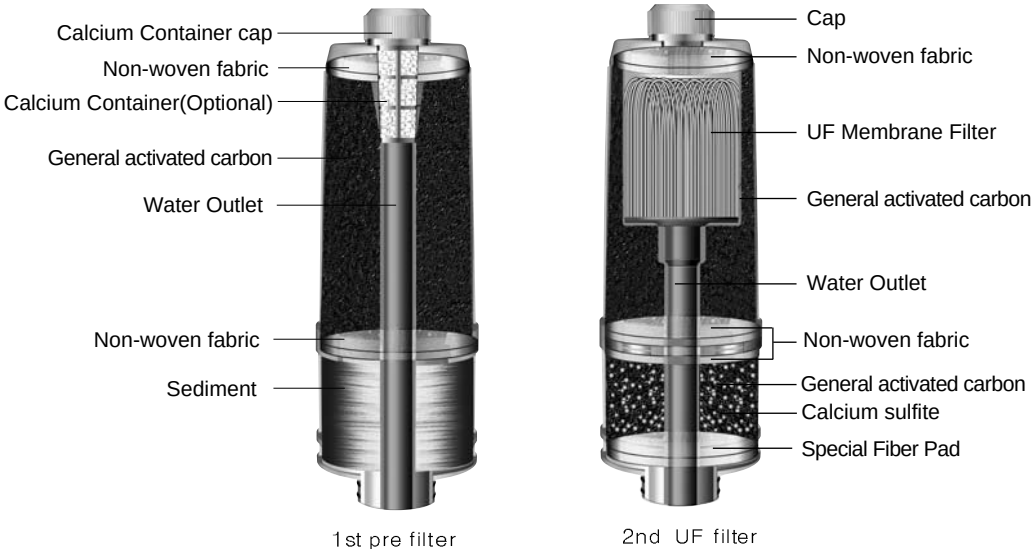

5 How to generate ionized water

Selecting alkaline ionized water

▶Operation indication panel

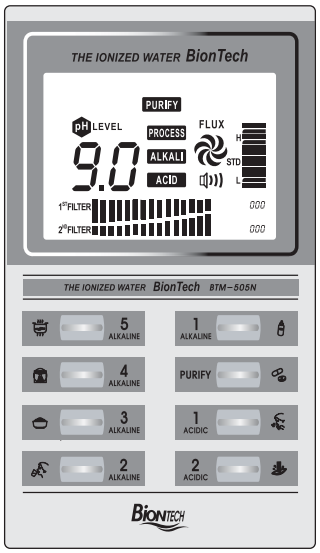

1. Open the water supply control valve to let the water flow in.

2. Use the pH button to select a stage.
   - The value of selected pH stage is indicated.
   - In case of "Alkaline", any value between stage 1~5 will be indicated.
   - When normally started, the system provides the alkaline ionized water with previously set alkaline value.

3. The product is ready to be used.
◎Voice guidance: "Alkaline Ionized Water on process."

- When the water supply control valve is turned off after selecting and using "Strong" "alkaline", the setting will be restored back to the previously set value of "Alkaline".
- Do not use the product in the "Strong alkaline" state for a long period of time.
- The power can be turned off due to the operation of the system protective circuit depending on the quality of water.

▶ Alkaline pH indication button

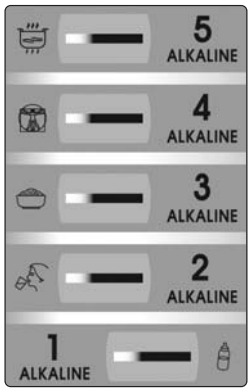

▶Indication of operation in progress

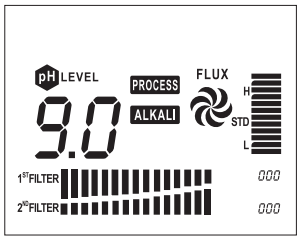

■ Indication light for water inflow.

When the tap water flows in, the water inflow indication light indicates 'Low' when the water pressure is low and 'High' when it is high.
You are required to adjust and keep the water pressure to make the indication light stay on at the center of the standard level.
※ When the indication light stays on at the standard level, about 1.5 ± 0.5 ℓ /Min. of water will flow through.

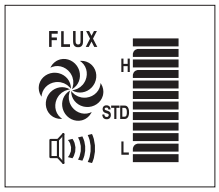

Selecting acidic ionized water

▶ Acidity pH indication button

▶Indication of operation in progress

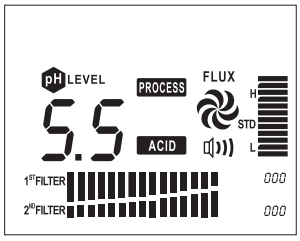

※When the acidity pH selection button for the operation is pushed, the acidic ionized water will flow through the alkaline ionized water outlet.

1. Open the water supply control valve to let the water flow in.

2. Use the acidity pH selection button for selecting.
   (Melody comes out while the product is being used)
   ◎**Voice guidance: "Acidic Ionized Water on process."**

3. Push the pH selection button to select the 1st stage or 2nd stage to obtain the water. When the water supply control valve is turned off in the middle of the water being used, the setting will be restored back to the previously set value of 'Alkaline'. In order to stop the operation in the middle of the use, other selection buttons need to be pushed to select other functions.

■Indication light for water inflow.

※Refer to the "Selecting the alkaline ionized water."

Caution

- Acidic ionized water is not for drinking, so do not drink it.
- Use the water after letting the water flow through for about 5 seconds right after the generation is initiated.
- Use the water initially daily after letting the water flow through for 10 ~ 15 seconds by opening the water tap completely.
- Use the water after letting the water flow through for more than 30 seconds when using the product after not using it for a few days.

- Should not remove the purification filter when letting the water flow through the main case.
- Do not drink the drained water following the automatic Self-Cleaning, and the acidic water.

Selecting purified water -
Only processed through purification treatment, the water will go through the electrolysis process.

▶Purified water indicating button

▶Indication of operation in progress

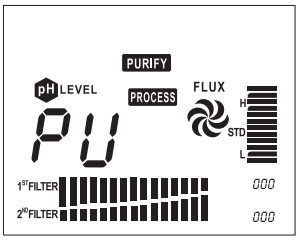

1. Open the water supply control valve to let the water flow in to generate the alkaline ionized water of the set value.
2. Push the purified water indicating button.
   - Indication light for purified water selection
   ◎ Voice guidance: "Crystal clear water on production."
3. Use the purified water.
4. When the water supply control valve is turned off in the middle of the water being used, the selection of the purified water is called off and the setting will be restored back to the previously set value of 'Alkaline'. In order to stop the operation in the middle of the use, other selection buttons need to be pushed to select other functions.

■ When the indication light for the purified water is turned off.

When there is a change in the water pressure leading to the lowering of the water level, the indication light will be turned off and the setting will be restored back to the previously set value of 'Alkaline'. Use the product by setting the value again after adjusting the water pressure.

How to measure the pH value (Ion concentration)

The pH values (Ion concentration) of the generated alkaline or acidic ionized water can be measured.

- Check the generated water after adjusting the water pressure to meet the standard water flow volume (1.5 ℓ ± 0.5 ℓ/Min.) according to the ionized water generation method.
  (The pH values can varies depending on the quality of water and the flow volume)

■ Materials to be prepared: The pH Regent - components

■ How to measure

1. Let the generated water (Alkaline or Acidic ionized water) flow through for about 10 seconds.
2. After filling a transparent glass water cup 1/3 with the water, drop 2~3 droppings of the pH Regent into the water and shake it.
3. Compare it with the pH colorimetry.

◎ Items that require your understanding

- The color of the test solution will change as time goes by.
  (Compare the color of the test solution with the pH colorimetry before too much time passes by after dropping the test solution into the water)
- When disposing of the undiluted test solution, you need mix it with water to make it light before letting it flow out.
- When the pH concentration is measured, the color of the test solution can come out differently compared with the pH colorimetry due to the effect of various substances dissolved in the water such as carbonic acid gas.
- The pH color of the alkaline or acidic ionized varies depending on the pH level.

Caution - Precautions for the pH test.

- Do not let the pH regent contact the eyes and do not drink it.
  - In case of drinking it by mistake, you need to drink lots of water. In case of the test solution contacting the eyes, you need to clean your eyes with sufficient water and then consult a doctor.
- Do not place it near any heat of fire. If not followed, fire can be caused.
- Do not store the regent in a place where it can be reached easily be children.
- Avoid any place where the temperature or moisture level is high.

※ The pH test solution is an expendable item. It can be purchased at the sales shop or the main office.

6 When and how to replace the filter

When to replace the filter

- When the water tastes changes or the water flow volume decreases dramatically, you need to check whether the life span is overdue.
- When the filter usage status indicating number becomes "999", it will blink.

※ It is recommended to replace the filter even before the end of life span is reached, if the water smells or the water flow volume decreases, considering the life span can be different depending on the quality of water in individual areas

Caution

■ In the following cases, the replacement period can be shortened drastically:

- When there is rusty water due to aged pipes
- Lots of impurities in the water for a short period of time
- If the product is used in a place where the water pressure is low.

How to replace the filter

■ Do not disconnect the electric plug.
(When the plug is disconnected, the system can be restored when the reset button is pushed)

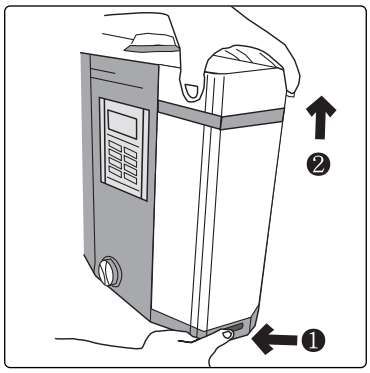

(Picutre 1)

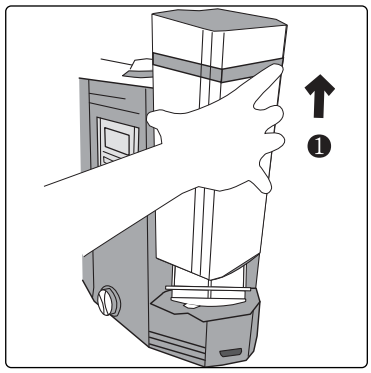

(Picutre 2)

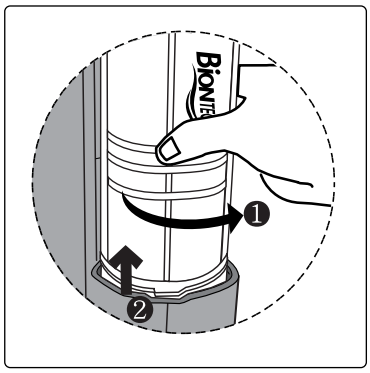

(Picutre 3)

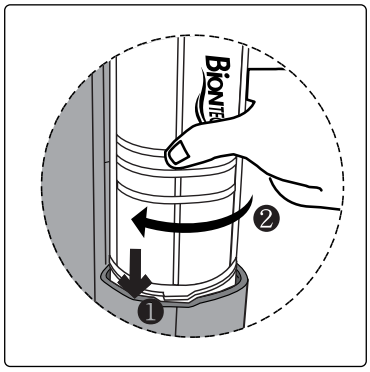

(Picutre 4)

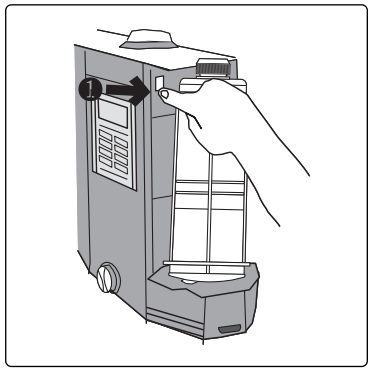

(Picutre 5)

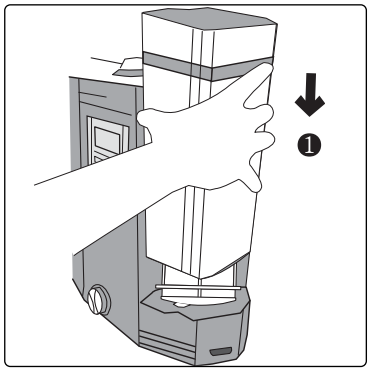

(Picutre 6)

1.Open the cover and remove the filter. (Picutre1~3)
- Be careful of the possible water coming out of the filter. (It is not leakage)

2.Replace with a new filter. (Picture 4)
- Should remove the sealing sticker of the filter.
- Check whether the O-ring is attached well at the bottom of the new filter first. Then, place the filter into the hole securely and turn it clockwise to insert it into the connection part. If a unbranded filter is installed, there will be a voice guidance saying "**Filter rejected, mount correct one.**", and the power will be turned off after 20 seconds.

3.Let the water flow through after selecting the purified water function.
- Let the water flow through for about 2~3 minutes.
  (Dusts of activated carbon which is the filtering medium may flow mixed together with water during the initial flow after the filter is replaced.)
- Check whether there is any water leakage at the installation section of the filter.

4. Push the reset button. (Picture 5)
- Check whether the filter usage status indicating number becomes. [000]

5. Close the cover. (Picture 6)

◎ Items that require your understanding.
- When you get the alkaline ionized water in a cup after the filter is replaced, there can be white bubbles.. That is not abnormal.
- The ion concentration (pH value) can become slightly higher after the filter is replaced (For about 1 week). That is not abnormal.

※ Follow the steps mentioned above even when replacing the filter earlier than the time for the replacement.

※ The filter without our company logo is not a genuine product. When a genuine filter is not used, the quality cannot be guaranteed and the normal after sales service(A/S) will not be available.

Cleaning Filter

Calcium scale in electrodes may cause….

The reason for the calcium scale on the alkaline side of the water ionizer is because the high pH of the water causes the minerals in the water to precipitate out of the water and become displaced.

Calcium scale on the electrodes causes the pH data of Ionized water decrease because the source water is not coming in contact with the electrodes. once your water ionizer is cleaned using this metod, the pH of the ionized water will be resume higher because the water is now coming in direct contact with the cleaned electrodes

Symptom of calcium scale

when whitish floating substances are found in the alkalized water
when the water output declines significantly
when the pH of alkalized water drops significantly

Use of Cleaning Filter

Cleaning filter will eliminate most Calcium scale on the plates and inside the chamber of your ionizer allowing for longer life and better performance.

Cleaning filter provides the way to keep your water ionizer.

insures that the platinum/titanium plates remain clean and free of calcium.

How to use cleansing filter

Warning

1. Clean the water ionizer machine for every 3-6 months.
2. Raise up the Flexible Alakaline Faucet a little higer than water ionzer body before cleaning.
3. Before starting cleaning, disconnect electric plug.
4. In case of 2 filters product, replace with cleaning filters from 1st & 2nd filters together before cleaning procedure.

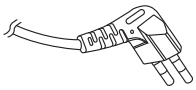

1. Disconnect the electric plug.
2. Turn off the water supply control valve.

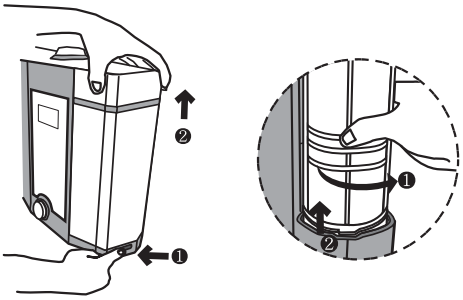

3. Open the filter cover and turn the filter right side and take it out.

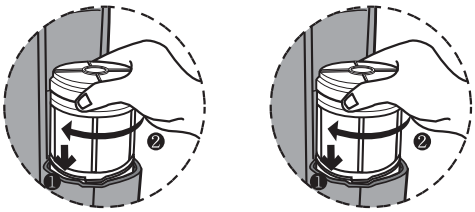

1st filter
Put empty filter on

2st filter
Put cleaning filter on

4. Replace with a cleaning filter.
(The reverse way from the installation)

Warning

- Do not use cleaning filter with main filters together at the same time.

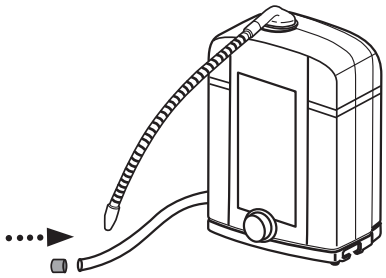

5. Insert the cap to the acidic hose's tap part.
(Cap is enclosed)

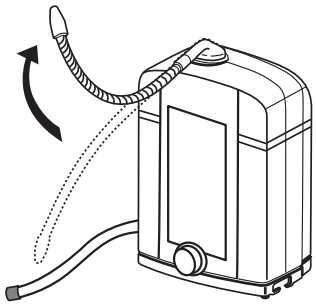

6. Raise up the Flexible Alakaline Faucet a little higer than water ionzer body before cleaning.

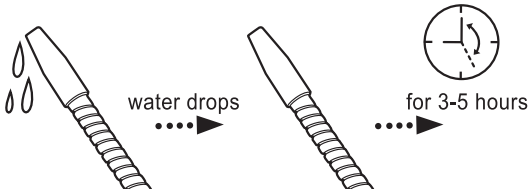

7. Turn on the water supply control valve until water drops from the tap part from the flexible faucet, then turn off the water supply control valve and wait for 3-5 hours as it is.

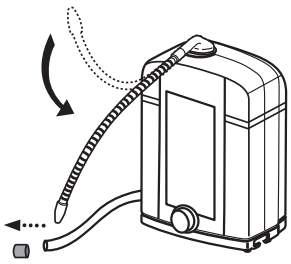

8. Take the flexible faucet down and remove the cap from the acidic hose's tap part.

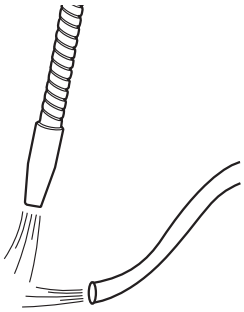

9. Turn on the water supply control valve and let the water pass fluently for about 5-10 minutes.

10. Turn off the water supply control valve, replace with the previous filter same as of above #2. #3.
Then, let the water passes for more than 1-3 minutes.

11. Close the filter cover and connect electric power.
Then cleaning procedure is finished.

12. The Calcium scales can be seen after replacement of filter.
Then let the water pass fluently before using.

7 How to use ionized water

1. How to use alkaline ionized water

	For the initial 7~14days			When using it daily		
	Children	Adults	Remarks	Children	Adults	Remarks
Alkaline ionized water	Stage 1	Stage 1	2~3 cups a day	Stage 1~2	Stage 2~3	

Caution – Should follow the items for your safety.

■ Do not use the following type of water
- Acidic water.
- Water drained after self cleaning.
- Water tested with the pH reagent.
- Water collected at the start of production. (About 1 ~ 2 cups of water)

■ Be careful about the following items when drinking the alkaline ionized water.
- Do not drink the alkaline ionized water together with medicine.
- Those people with achlorhydria should not drink the water

- Do not use the water for raising fishes such as goldfish or tropical fish
- Do not use any aluminum made container vulnerable to the alkaline ionized water.
  Do not use any copper made container vulnerable to the acidic ionized water.
- Do not store the alkaline ionized water for a long period of time.

- Those people who just started using the water need to begin with small amount of nearly pH neutral water, and then adjust the pH level gradually for drinking the water.
  (Stage 1 of the alkaline ionized water is for the initial stage drinking)

2. How to use alkaline ionized water for the general purposes

- It will be good for your health if you drink it on an empty stomach in the morning or before going to bed.
- Set the alkaline water at the stage 1~2 and try to drink 1~2 cups of water daily for a week (7~14days). If you do not have any problems after the trials, it will be good for your health to set the stage of ionized water at the level suitable for you body.

3. How to use alkaline ionized water for the special purposes

■ When cooking rice

Try to cook rice after soaking the rice in the alkaline water for 30 ~ 60 minutes in advance.
When cooking rice with the alkaline water, the rice will be glossy like glutinous rice, tasty, stored well and kept fresh for a long period of time.

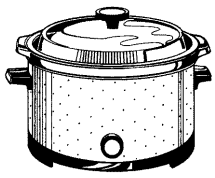

■ Coffee, black tea and others

Help remove the bitter taste of coffee and the puckery taste of black tea as well as enriching the faint taste and fragrance peculiar to black tea.

■ Heavy drinking and hangover

It will be good for your health if you drink it before going to bed or drink it on the empty stomach in the morning.

■ **Various dishes**
When cooking bamboo shoots, tree shoots, taro and seaweed with the alkaline water, the biting taste and the souring taste will be gone while the natural taste will enriched. When using it as the water for cooking fish, the fishy smell will be eliminated, making the fish taste better.

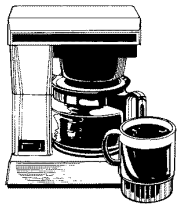

■**Liquors, cocktails**
The liquors will be made highly mild and soft. When making an ice cocktail using the alkaline water, the taste will be better.

■**Plants**
If seeds are soaked in the alkaline water before being sowed, the germination rate will be enhanced. Even in case of stem cutting or grafting, plants will take root better. When the water is applied for ornamental plants, the growth of roots will be facilitated. The alkaline water will neutralize the acid soil and effectively facilitate the growth of plants.

■ **Vegetables, fruits**
If vegetables or fruits which are to be stored are washed using the alkaline water, they can be kept fresh for a longer period of time. Soaking Vegetable to eliminating Agricultral chemical.

■ **Vegetables with unpleasant odors**
When cooked after being soaked in the alkaline water for about 20~30 minutes, oder will be reduced, making vegetables more soft and tastier

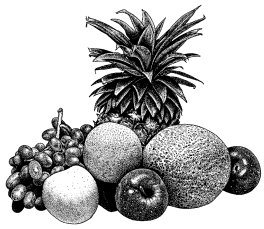

■ **Powdered milk for infants**
When mixed with the alkaline water, the powdered milk will be healthier food for infants to eat.

4. How to use the acidic ionized water for special purposes

■ **Bathing, washing of the face, washing of feet**
When used for bathing, the acidic water can be a beauty solution good for your skin. The acidic water is astringent helpful in making the skin soft and elastic (Skin is mildly acidic). When the acidic water is used as rinse for the hair just shampooed, it will neutralize the alkalinity of the soap, helpful in keeping the hair glossy. When the acidic water is used as sanitary or astringent solution for the skin just shaved, it can replace the skin toner or skin lotion.

■ **Floral arrangement**
When the acidic water diluted 1:2 is applied to the cut part of the flowers, it will keep the flowers fresh for a longer period of time.

■ **Water for parboiling noodles**
When the acidic ionized water is used for parboiling noodles, it will keep them glutinous, chewy and tastier (Thicker noodles for spaghetti, for example, may not be well parboiled with the acidic ionized water, then the alkaline ionized water can be used).

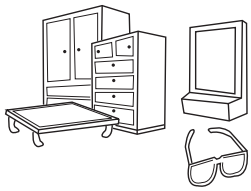

■ **Washing or processing of fruits and vegetables which contains anthocyanin**
When peaches, grapes, strawberries, red cabbages, beans and Asparagus are washed and processed with the acidic water, their natural colors can be kept without a change.
Rising with Acid water to elimininating Viruses Bacilli and wash with Alkali water.

■ **When preparing fried dishes**
When the acidic ionized water is used for preparing fried dishes, the foods will be crispy and tastier.

■ **When boiling eggs**
When the acidic ionized water is used for boiling eggs, the eggs will peel off easily and taste better a lot.

■ **When cleaning**
When the acidic ionized water is used for cleaning corridors, and tiled floors, the dusts of every nook and corner can be easily removed. The acidic ionized water is also fast in drying, so it is not sticky.

■ **When cleaning glass**
When glass, mirrors and glasses are washed with the acidic ionized water, dusts or filth can be easily eliminated and the gloss will be made better. Try to clean household items such as washbowls and chairs and they will be made surprisingly clean.

■ **When deposits are formed at a kettle or a pot is incrusted due to burning**
When deposits are formed at the kettles, or pots are incrusted due to burning, try to place them in the acidic ionized water for overnight, and then they will be made clean.

■ **As the bathing water or for the cleaning of the bathtub**
When the acidic water is mixed and boiled together with the bathing water, the combined water can be easily boiling due to the high thermal conductivity of the acidi water. The bathtub can be kept clean because the slime in the water does not build up easily.

■ **When cleaning the chopping board**

When you use the chopping board continuously for a long time, it will be full of knife scars. Then filthy impurities can be stuck in those knife scars. Use the acidic ionized water to clean and sanitize the chopping board completely.

■ **When cleaning the tableware**

Considering that the acidic ionized water has the cleaning as well as sterilizing power, it can be used for cleaning the tableware.

■ **When washing the floors**

The floorcloth, which is constantly kept wet, is the hotbed for molds. When the acidic ionized water is used for washing the floorcloth, filthy odor can be removed and also the sterilizing effect can be enjoyed. The same goes for the dishcloth.

Caution - Should the following items for your safety.

■ Do not spray water onto the product for cleaning.
● If not followed, electric shocks can be caused.

■ Do not use benzene, thinner or insecticidal sprays for cleaning the product.
● If not followed, the outer shape and main body can be transformed or cracks can be caused.

● Contact the sales shop or the main office for advice when you try to use the product which has not been used for a long period of time.

8 Before you think the system is malfunctioning

Q & A Answers to questions

For the use of the system

Q (Questions)	A (Answers)
Can we use the underground water ?	● Yes, the ground water can be used ● But, the designated pH concentration level may not achieve depending on areas and quality of water. Before installing the system, you need to check whether the requirements for the drinking water can be met. [Contact the sales shop or the main office for more detailed information]
How to handle the product when we will not use for a long period time (More than 10 days) ?	● The filter needs to be disconnected from the main body, packed into a vinylpackage and stored in a refrigerator. ● Disconnect the electric plug. ● When you start to use the system newly after the period you need to replace the filter. Then you need to use water after letting the water flow through for about 3 minutes.
What temperature the flowing water is allowed to keep ?	● Only the water temperatures that is below 30°C can be used within the water unit.

Q (Questions)	A (Answers)
The red lamp is turned on at 'Strong Alkaline Stage 5". Is it OK when we use the water for soaking out the puckery or bitter tastes of vegetables or washing them?	● There should be no problems with using the water for soaking out the puckery or bitter tastes of vegetables or washing them. ● Do not use the water for daily drinking.
When we get the alkaline ionized water in a cup, there are white bubbles. What are those bubbles?	● The bubbles are generated because, while ions are generated, the molecules of alkaline ionized water are so tiny and the dissolved hydrogen is sufficiently available. ● The bubbles can be generated highly right after the installation, or the replacement of the filter. There should be no problems using the product.
When we get the alkaline ionized water in a container, there are white substances forming, or depositing on the bottom. What are those? ※ This is a rare phenomenon that occurs in purification. If the water contains mineral substances or carboxyl group (CO_3), they may become more activated with electrolysis-ionization, and it may become serious. Adjust the pH level to meet the characteristics of the water.	● The white substances are generated because the alkaline ionized water contains lots of mineral calcium. Especially when the carboxyl group(CO_3) is abundant, it is bonded with calcium, leading to the precipitation of calcium carbonate ($CaCO_3$). It shows that the electrolysis is surely working. Even though there should be no problems with drinking the water, you need to clean the container. Fill the water container with the diluted household vinegar and leave it for one hour. Then shake the container for cleaning.
How about cooking rice using the alkaline ionized water ?	● Rice can be sticky depending on the volume of water, kinds of rice and kinds of r ice cooking appliance. ● Use the water after setting the appropriate stage of ionized water.
Which water would you recommend for the infants?	● It is recommended that the infants are fed low alkaline ionized water. (Alkaline ionized water Stage 1.) (See page 20.)

	Q (Questions)	A (Answers)
About the acidic ionized water	What is the pH of the acidic water coming out of the acidic water outlet in the middle of the alkaline ionized water being used?	
	What kind of impact can the acidic water might have on the skin?	● The human skin is mildly alkaline to pH 5.5. The alkaline water not only help keep the acidity of the skin at an appropriate level, but also can help the contraction of skin pores to help keep the skin constantly elastic and moisturized.

Selection stage		Acidic water pH value	Purpose
Strong alkaline pH10.0 ±0.5		pH4.0 ±0.5	Eliminate the fishy smell after cooking fish
Alkaline	Drinking, culinary pH9.5 ±1.0	pH4.5 ±1.0	Clean the tableware
	Drinking, Cook pH9.0 ±1.0	pH5.0 ±1.0	
	Initial drinking pH8.0 ±1.0	pH6.0 ±1.0	

※The pH value can be varied depending on the quality of water and the water flow volume.

About After Sales Service

■ You need to check the following items before requesting the repair work if you think the system is malfunctioning :

■ You should not try to disassemble and repair the system. Contact the sales shop or the main office when the system is malfunctioning.

※ When there are abnormalities with the system because of your mishandling of the system, the electric plug needs to be disconnected. Afterwards, restart the system. The system will be restored to normal operation.

■ When the following lamps are indicated.

Symptoms	Causes and actions
The power can not be turned on, or is turned off in the middle of the use.	● Is the water flow volume insufficient? (At least 0.5 ℓ /Min. is required) => Open the water branch pipe and adjust the water flow volume. ● Is the electric cord appropriately inserted? => Insert the cord into the wall socket correctly. ● Is the fuse cut off? Check the fuse(Rated fuse 250V/3A) ● After inserting the electric cord into the wall socket, you need to check whether a 'beeping' sound is generated when pushing the button lightly. => The beeping sound means that there are no problems with the fuse.
The power is turned off inadvertently in the middle of the use (Periodically On/Off repeatedly)	● It is because of the bimetallic safety system for the overheating inside the system in case of long hours of operation. When the temperature goes down after the water supply control value is turned off, you can turn on the valve for the use.
Once after [Strong alkaline], [Acidic] and [Purified water] is used, the indication will change into [Alkaline].	● When the water supply control valve is turned off once after [Strong alkaline], [Acidic] and [Purified water] is used, the setting will be restored to the previously set value of [Alkaline] automatically. => Not malfunctioning.

Symptoms	Causes and actions
1) ERROR MODE: Error indication by ERR 3 (For overheating of electrolysis cell)	1) Indication for the overheating of electrolysis cell.
2) ERROR MODE: Error indication by ERR OF (For excessive water flow volume)	2) Indication for water flow volume exceeding 3.3 ℓ/Min.
3) ERROR MODE: Error indication by ERR 8 (For a fake filter)	3) Indication for a fake filter - Need to replace with a genuine filter designated by the company
Even after the filter is replaced, the [000] value is not acquired	● Is the reset button pushed? => Push the reset button while the water flows through or the system is suspended. ● Is the reset button pushed while the electric plug is disconnected? => Reconnect the electric plug and push the reset button. ● Check whether the filter is a genuine one made by the company. =>If a unbranded filter is installed, there will be a voice guidance saying "Filter rejected, mount correet one" and the power will be turned off after 20 seconds.
The filter usage status indication is not turned on	● Is the water flow suspended? => When the water flows through, the indication will be turned on. When it stops, the indication will be turned off. ● Is the electric plug disconnected? => Reconnect the plug. ● The system is malfunctioning. => After disconnecting the electric plug, you need to contact the sales shop for advice. ※ The power will not be turned on when the water flow can not be detected due to the lower water pressure. (Pressure of the tap water is less than 0.6)
All lamps of the main body are turned on. (Still turned on even after the water flow is stopped)	● The system is malfunctioning. => After disconnecting the electric plug, you need to contact the sales shop and request repair work.
No melody plays, even during the Acidic function.	● Check that the Acidic button has been selected. ⇒ Allow water to flow and press the Acidic button.
Filthy odors, weird tastes and murky substances are not eliminated.	● The filter performance is degraded. => Replace the filter. ● Is the water pressure low? => Open the water branch pipe for adjusting (Contact the sales shop or the main office when the problem is not solved even after the widest opening of the water branch pipe) ● Is the water flow volume too high? => Adjust by the water supply control valve.

Symptoms	Causes and actions
The outflow water volume is low or there is no outflow. ※ The life span of the filter can be shortened when it is blocked due to the sever pollution of the source water.	● Is the life span of the filter overdue? (Need to check the filter usage status number) => Replace the filter. ● Is the filter wrongly fixed? => Fix it right. ● Is the water supply suspended? => Wait until the water supply is resumed. ● Is the hose bent or crushed? => Set it right.
The water becomes warm when it flows through the main frame.	● When the water flows through initially, the water can become warm due to the room temperature or the heat inside the main body. => Not malfunctioning. Use the water after let the water flow through.
The pH of the acidic water is indicated as neutral.	● For about one week after the new filter is installed, the pH value of the acidic water may not fall into the range of the colorimetry (Due to the effect of the activated carbon) => Not malfunctioning. Check again one week later. ● If the pH value of the acidic water is 6.5, the value may be not compatible with the samples of the pH measurement sheet.
Water leaks from the bottom of the main body.	● Dew condensation can occur inside the main body due to the conditions of temperature and moisture. => Not malfunctioning. ● If the situation is not temporary and the water leakage volume is high, then it means the system is malfunctioning. => Contact for requesting after sales service.
No water comes out of the acidic water outlet while [Alkaline] or [Strong Alkaline] is used.	● Is the acidic water drainage hose bent or crushed? (The water may not taste good) => Set it right

Symptoms	Causes and actions
Water keeps [dripping] from the outlets (Especially the acidic water outlet) even after the water supply control valve is turned off.	● The remaining water inside the outset can comes out => Not malfunctioning. ● The rinsing operation is in progress. => Not malfunctioning. (See page 18.)
When tested with the pH test solution, it is yellow for the acidic water, but in case of the alkaline water, the color becomes neutral momentarily.	● It is due to the effect of the carbonic acid in the water. (Severe in case of the ground water) => Use the water after adjusting the stage of the alkaline ionized water to Stage 5. Considering that the alkaline reaction and the acidic reaction occur in an opposite way, so it is understood that the alkaline ionized water is generated also if there is acidic reaction taking place. We can simply say that the symptom is the result of the vaporization of the test solution due to the chemical reaction involving the carbonic acid in the water.
Water smells disinfectants * Various causes can lead to the symptom. If the problem is not solved by replacing the filter, the water purification process needs to be selected to check the problem. When there is still nothing found about the problem, the items on the right side need to be checked.	● Check whether the storage container is cleaned. => Wash the storage container cleanly. ● The life span of the filter can be shortened due to pollution depending on the condition of the water supply. => Replace the filter (Refer to Page 18). ● The ionized water has less crusts of water, meaning that the water is highly active for reaction. Extremely low volume of impurities, when spread throughout the water, can cause the water to be activated together and, possibly, the water to smell. => Use the water by adjusting the alkaline level down by 1~2 stages. ● Check whether the acidic water hose is higher than the main body. => Install the hose 50~70cm below the level of the main body.
The power is not turned off when the water supply control valve is turned off.	● The system is malfunctioning. => After disconnecting the electric cord, you need to contact the sales shop or the main office for requesting the repair work.
Water leakage at the water purifier. (Filter socket)	● Check whether the filter is appropriately fastened into the filter socket. => After checking the filter packing, you need to fasten it to the filter base appropriately.

Product Specifications

Product name		Water Ionizer	
Model		BTM-505N	
Protection type and class		Class 2, Type B equipment	
Rated power supply		□120V □220V □230V □240V / □50Hz □60Hz	
Water supply		To tap water	
Main unit	Dimension	320x340x140 (WxHxD) mm	
	Weight	About 6.5 kg	
Water pressure		70~500 kgf/	
Operating temp.		5 ~ 30 °C	
Protection devices		Built-in temp. sensors: 2 sensors (automatic restoration)	
Electrolysis	Method	Continuous electrolysis	
	Capacity	Standard 1.5 ℓ /min ±0.5 ℓ (0.4gal/min ±0.1gal) Max 3.3 ℓ /min (0.8gal/min)	" Including alkaline and acidic ionized water "
	Steps	Alkaline / Acidic : 5 steps / 2 steps	
	Cleaning	Double Automatic Reverse Cleaning and manual cleaning	
	Electrodes	Platinum-titanium electrodes	
Purify filter	Replacement	Cartridge type (2Stage)	
	Lifespan	1st: Approx. 3000 ℓ 2st: Approx. 4000 ℓ Lifespan indication by LCD	
	Indication	LCD character	
	Material	Nonwoven fabric, Granular activated carbon, calcium sulphite, Sediment (Pre filter), and UF membrane filter	
Manufacturing Registered		KFDA Manufacturing Registered No. 889	
Product License		No. 07-171	

Consumer Damage Indemnification Guidelines

<table>
<tr><th colspan="3" rowspan="2">Type of consumer damage</th><th colspan="2">Indemnification</th></tr>
<tr><th>Within warranty</th><th>After warranty</th></tr>
<tr><td rowspan="8">Defect or malfunction in performance and function that occurred during normal operation</td><td colspan="2">If repair is necessary within a month after purchase due to manufacturing defect.</td><td>Replacement</td><td>Charged service</td></tr>
<tr><td colspan="2">If a replaced product requires major repair within a month of replacement.</td><td>Replacement</td><td>Charged service</td></tr>
<tr><td rowspan="2">Reparable</td><td>If defect occurs.</td><td>Free service</td><td>Charged service</td></tr>
<tr><td>If the same defect reoccurs after repair (more than four times).</td><td rowspan="3">Replacement</td><td rowspan="3">Replacement after amount deduction</td></tr>
<tr><td colspan="2">Not reparable</td></tr>
<tr><td colspan="2">If repair is impossible due to lack of parts.
(The company should carry parts for 5 years.)</td></tr>
<tr><td colspan="2">If a product handed over for repair was lost by the company.</td><td>Replacement</td><td>Replacement</td></tr>
<tr><td colspan="2">Damage during transit</td><td>Replacement</td><td>Charged service</td></tr>
<tr><td rowspan="2">Defect or malfunction as a result of consumer's negligence or error</td><td colspan="2">Reparable</td><td>Charged service</td><td>Charged service</td></tr>
<tr><td colspan="2">Not reparable</td><td>Replacement after totaling repair cost</td><td>Separate criteria</td></tr>
<tr><td colspan="3">▶ Malfunction as a result of an act of God (fire, salt damage, gas, earthquake, wind or flood)
▶ Normal consumption of a consumable
▶ Problem due to consumer not using a consumable or optional item as designated
▶ Any other problem as a result of external causes.
▶ Problem that occurred due to product serviced by an unauthorized person</td><td>Charged service</td><td>Charged service</td></tr>
</table>

Product Warranty

This product has passed a thorough quality compliance test administered by our technical team and authorized institutions. It is produced under the Korea Food and Drug Administration (KFDA) Manufacturing Permit No. 889. In the event of any defect or product malfunction, take this warranty to your distributor, purchase retailer or our head office, and we will repair your product in accordance with the product warranty.

Warranty

1. This product is subject to one year free warranty service.
2. The free service period begins from the date of purchase. Please write down the date of purchase on the warranty.
   (If the date of purchase cannot be confirmed, free service is not provided.)
3. This warranty is not reissued. Keep it in a safe place together with the operation manual.
4. Responsibility and indemnification
   If the retailer has closed business or incurred bankruptcy, the manufacturer will warrant the product.
5. The following are "warranty exceptional cases" for which service cost will be charged:
   A. Warranty period has expired.
   B. Defect or malfunction as a result of an act of God.
   C. Malfunction as a result of the user's failure to follow the instructions in the manual.
   D. Defect or malfunction as a result of shock or disassembly of the product.
   E. A consumable has been consumed.
   F. Customer's failure to present the product warranty.

Date of Purchase :	(Day)	(Month)	(Year)
Product	Model	BTM-505N	
	Mfg. No.		
Customer		TEL	
Address			
Sold by	Branch	Distributor	TEL

■ Request for service

If you wish to get your product serviced, contact the retailer you purchased the product from or our customer service center and present the product warranty with the date of purchase.

MEMO

MEMO

Quality certified company

Selected as KGMP competent company

Class Ⅰ Registered U.S. Food and Drug Administration

Acquired ISO 9001 Certificate Acquired ISO 14000 (international standard for nvironmental management system)

CE-European Quality Certificates

U.S. and Canada NRTL Certificates

WATER IONIZER

Bion-Tech Co., Ltd.

298-15 Gongdan-ro(Geumjeong-dong),
Gunpo-si, Gyeonggi-do Korea
Tel : 82-31-459-3853
Fax : 82-31-429-3859
E-mail : btm@biontech.biz
http://www.bion-tech.com (Korean)
http://www.biontech.biz (International)

These instruction shall also be available in an alternative format, e.g. in a soft copy on the website.